P-DUKE POWER

QBE100W Series

Quarter-Brick DC-DC Converter
Up to 100 Watts

3 YEARS WARRANTY

RoHS COMPLIANT

REACH COMPLIANT

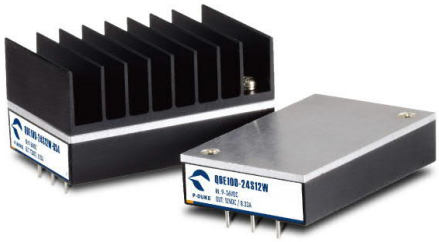

Railway | Automation | Datacom
IPC | Industry | Measurement
Telecom | Automobile | Boat
Charger | Medical | PV

3000 VAC Reinforced Insulation | 3000 VDC Basic Insulation | 4 : 1 Wide Input Range | NO Min. Load Required | LOW Standby Power | Operating Altitude 5000 meter | REMOTE ON OFF | OCP | OTP | OVP | SCP | UVP

PART NUMBER STRUCTURE

QBE100 -	48	S	05	W	-	P	HS
Series Name	**Input Voltage (VDC)**	**Output Quantity**	**Output Voltage (VDC)**	**Input Range**		**Ctrl and Pin Options**	**Assembly Options**
	24: 9~36 **48:** 18~75 **110:** 40~160	**S:**Single	**3P3:**3.3 **05:**5 **12:**12 **15:**15 **24:**24 **28:**28 **48:**48 **54:**54	4:1		**□:**Negative logic **P:**Positive logic	**□:** None **Heat-sink type** **HS:**7G-0029B-F;H=0.24” **HS2:**7G-0031B-F;H=0.24” **HS4:**7GA0124P01-F;H=0.65” **HS5:**7GA0125P01-F;H=1” **Through hole type** **TH:**No thread* * The module can’t equip Heat-sink with TH option.

TECHNICAL SPECIFICATION All specifications are typical at nominal input, full load and 25℃ unless otherwise noted

Model Number	Input Range	Output Voltage	Output Current @Full Load	Input Current @No Load	Efficiency	Maximum Capacitor Load
	VDC	VDC	A	mA	%	μF
QBE100-24S3P3W	9 ~ 36	3.3	25	35	89	75000
QBE100-24S05W	9 ~ 36	5	20	40	91	40800
QBE100-24S12W	9 ~ 36	12	8.33	40	92	7000
QBE100-24S15W	9 ~ 36	15	6.67	40	92	4600
QBE100-24S24W	9 ~ 36	24	4.17	40	92	1800
QBE100-24S28W	9 ~ 36	28	3.57	40	92	1350
QBE100-24S48W	9 ~ 36	48	2.08	40	92	430
QBE100-24S54W	9 ~ 36	54	1.85	45	92	380
QBE100-48S3P3W	18 ~ 75	3.3	25	15	89	75000
QBE100-48S05W	18 ~ 75	5	20	15	91	40800
QBE100-48S12W	18 ~ 75	12	8.33	15	92	7000
QBE100-48S15W	18 ~ 75	15	6.67	15	92	4600
QBE100-48S24W	18 ~ 75	24	4.17	15	92	1800
QBE100-48S28W	18 ~ 75	28	3.57	15	92	1350
QBE100-48S48W	18 ~ 75	48	2.08	25	92	430
QBE100-48S54W	18 ~ 75	54	1.85	25	92	380
QBE100-110S3P3W	40 ~ 160	3.3	25	8	89	75000
QBE100-110S05W	40 ~ 160	5	20	8	91	40800
QBE100-110S12W	40 ~ 160	12	8.33	8	92	7000
QBE100-110S15W	40 ~ 160	15	6.67	8	92	4600
QBE100-110S24W	40 ~ 160	24	4.17	10	92	1800
QBE100-110S28W	40 ~ 160	28	3.57	10	92	1350
QBE100-110S48W	40 ~ 160	48	2.08	12	91	430
QBE100-110S54W	40 ~ 160	54	1.85	12	92	380

INPUT SPECIFICATIONS

Parameter	Conditions		Min.	Typ.	Max.	Unit
Operating input voltage range		24Vin(nom) 48Vin(nom) 110Vin(nom)	9 18 40	24 48 110	36 75 160	VDC
Start up voltage		24Vin(nom) 48Vin(nom) 110Vin(nom)			9 18 40	VDC
Shutdown voltage		24Vin(nom) 48Vin(nom) 110Vin(nom)	7.2 15.0 31.0	7.7 16.2 33.5	8.3 17.2 36.0	VDC
Start up time	Constant resistive load	Power up Remote ON/OFF		75	100	ms
Input surge voltage	1 second, max.	24Vin(nom) 48Vin(nom) 110Vin(nom)			50 100 185	VDC
Input filter (1)				Pi type		
Remote ON/OFF	Referred to –Vin pin	Negative logic (Standard) DC-DC ON		Short or 0 ~ 1.2VDC		
		Negative logic (Standard) DC-DC OFF		Open or 3 ~ 12 VDC		
		Positive logic (Option) DC-DC ON		Open or 3 ~ 12 VDC		
		Positive logic (Option) DC-DC OFF		Short or 0 ~ 1.2VDC		
		Input current of Ctrl pin	-0.5		1	mA
		Remote off input current		3		mA

OUTPUT SPECIFICATIONS

Parameter	Conditions		Min.	Typ.	Max.	Unit
Voltage accuracy			-1.0		+1.0	%
Line regulation	Low Line to High Line at Full Load		-0.1		+0.1	%
Load regulation	No Load to Full Load	3.3 & 5Vout	-0.2		+0.2	%
		Others	-0.1		+0.1	
Voltage adjustability	Maximum output deviation is inclusive of remote sense		-20		+10	%
Remote sense	% of Vout(nom) If remote sense is not being used, sense pins should connect to the output pins with the same polarity.				10	%
Ripple and noise	Measured by 20MHz bandwidth					
	With a 1μF/25V X7R MLCC and a 47μF/20V SP-CAP	3.3Vout, 5Vout		80		mVp-p
	With a 22μF/25V X7R MLCC	12Vout, 15Vout		100		
	With a 4.7μF/50V X7R MLCC	24Vout, 28Vout		220		
	With a 4.7μF/100V X7R MLCC	48Vout, 54Vout		300		
Temperature coefficient			-0.02		+0.02	%/℃
Transient response recovery time	25% load step change			250		μs
Over voltage protection	% of Vout(nom); Hiccup mode		115	125	130	%
Over load protection	% of Iout rated; Hiccup mode		125	150	170	%
Short circuit protection			Continuous, automatics recovery			

GENERAL SPECIFICATIONS

Parameter	Conditions			Min.	Typ.	Max.	Unit
Isolation voltage	1 minute (Reinforced insulation)	110Vin(nom)	Input to Output	3000			VAC
			Input (Output) to Base-Plate	1500			
	1 minute (Basic insulation)	Others	Input to Output	3000			VDC
			Input (Output) to Base-Plate	1600			
Isolation resistance	500VDC			1			GΩ
Isolation capacitance						1500	pF
Switching frequency				140	190	250	kHz
Safety approvals (Pending)						IEC/ EN/ UL 62368-1	
Standard approvals (Pending)						EN50155 EN45545-2	
Case material				Aluminum base-plate with plastic case			
Potting material				Silicone (UL94 V-0)			
Weight				67.5g (2.38oz)			
MTBF	MIL-HDBK-217F, Full load			6.143×10^5 hrs			

ENVIRONMENTAL SPECIFICATIONS

Parameter	Conditions	Min.	Typ.	Max.	Unit
Operating base-plate temperature		-40		+105	℃
Maximum case temperature				105	℃
Over temperature protection			110		℃
Storage temperature range		-55		+125	℃
Operating altitude				5000	m
Thermal impedance	Module without assembly option		9		℃/W
	Only mount on the iron base-plate		2.8		
	Heat-sink type with 0.24" Height		7.1		
	Heat-sink type with 0.65" Height		4.2		
	Heat-sink type with 1" Height		3.4		
Thermal shock				MIL-STD-810F	
Shock				EN61373, MIL-STD-810F	
Vibration				EN61373, MIL-STD-810F	
Relative humidity				5% to 95% RH	

EMC SPECIFICATIONS

Parameter	Conditions		Level
EMI	EN55032, EN50121-3-2	With external components	Class A, Class B
EMS	EN55035, EN50121-3-2		
ESD	EN61000-4-2	Air ± 8kV and Contact ± 6kV	Perf. Criteria A
Radiated immunity	EN61000-4-3	20 V/m	Perf. Criteria A
Fast transient	EN61000-4-4	±2kV	Perf. Criteria A
	QBE100-24S□□W QBE100-48S□□W	With 2 pcs of aluminum electrolytic capacitor (Nippon Chemi-con KY series, 330μF/100V)	
	QBE100-110S□□W	With 2 pcs of aluminum electrolytic capacitor (Nippon Chemi-con KXJ series, 150μF/200V)	
Surge	EN61000-4-5	±2kV	Perf. Criteria A
	QBE100-24S□□W QBE100-48S□□W	With 2 pcs of aluminum electrolytic capacitor (Nippon Chemi-con KY series, 330μF/100V)	
	QBE100-110S□□W	With 2 pcs of aluminum electrolytic capacitor (Nippon Chemi-con KXJ series, 150μF/200V)	
Conducted immunity	EN61000-4-6	10 Vr.m.s	Perf. Criteria A
Power frequency magnetic field	EN61000-4-8	100A/m continuous; 1000A/m 1 second	Perf. Criteria A

Note:

1. Input source impedance: The power module will operate as specifications without external components, assuming that the source voltage has a very low impedance and reasonable input voltage regulation. Highly inductive source impedances can affect the stability of the power module. Since real-world voltage source has finite impedance, performance can be improved by adding external filter capacitor.
   The QBE100-24S□□W and QBE100-48S□□W recommended external filter capacitor Nippon Chemi-con KY series, 330μF/100V
   The QBE100-110S□□W recommended external filter capacitor Nippon Chemi-con KXJ series, 150μF/200V.
2. BASE-PLATE GROUNDING: When connect two screw bolts to shield plane, the EMI could be reduced.

CAUTION: This power module is not internally fused. An input line fuse must always be used.

CHARACTERISTIC CURVE

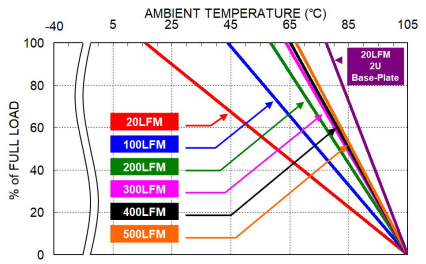

QBE100-48S05W Derating Curve

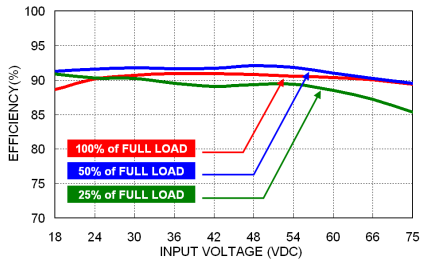

Efficiency vs. Input Voltage

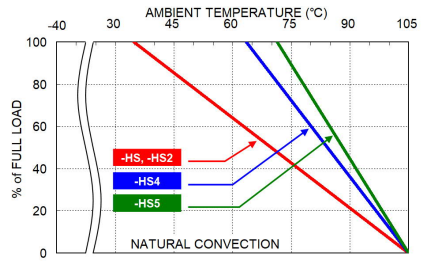

QBE100-48S05W Derating Curve with Heat-sink
(See Thermal Considerations)

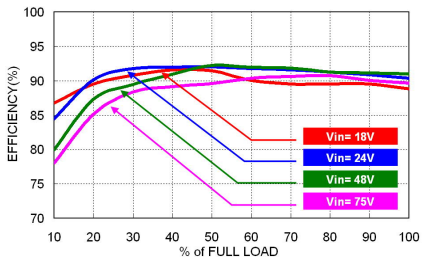

Efficiency vs. Output Load

FUSE CONSIDERATION

This power module is not internally fused. An input line fuse must always be used.
This encapsulated power module can be used in a wide variety of applications, ranging from simple stand-alone operation to an integrated part of sophisticated power architecture.
To maximum flexibility, internal fusing is not included; however, to achieve maximum safety and system protection, always use an input line fuse.
The input line fuse suggest as below：

Model	Fuse Rating (A)	Fuse Type
QBE100-24S□□W	20	Fast-Acting
QBE100-48S□□W	12	Fast-Acting
QBE100-110S□□W	5	Slow-Blow

The table based on the information provided in this data sheet on inrush energy and maximum DC input current at low Vin.

MECHANICAL DRAWING

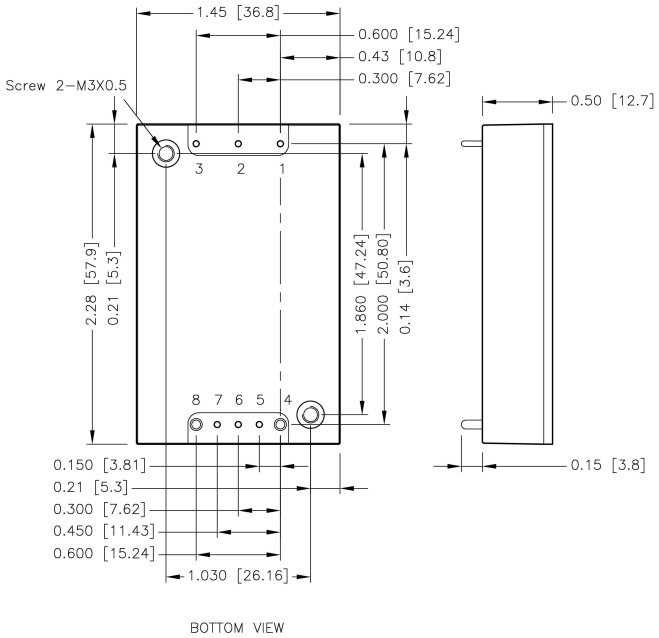

PIN CONNECTION

PIN	DEFINE	DIAMETER
1	- Vin	0.04 Inch
2	Ctrl	0.04 Inch
3	+ Vin	0.04 Inch
4	- Vout	0.06 Inch
5	- Sense	0.04 Inch
6	Trim	0.04 Inch
7	+ Sense	0.04 Inch
8	+ Vout	0.06 Inch

1. All dimensions in inch [mm]
2. Tolerance :x.xx±0.02 [x.x±0.5]
   x.xxx±0.010 [x.xx±0.25]
3. Pin dimension tolerance ±0.004[0.10]
4. The screw locked torque:MAX 3.5kgf-cm [0.34N-m]

RECOMMENDED PAD LAYOUT

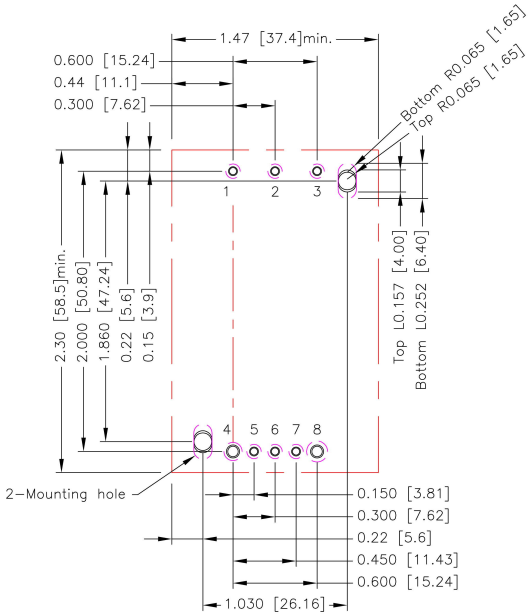

All dimensions in inch[mm]
Pad size(lead free recommended)
Through hole 1.2.3.5.6.7: ∅0.051[1.30]
Through hole 4.8: ∅0.075[1.90]
Through hole of mounting: ∅0.126[3.20]
Top view pad 1.2.3.5.6.7: ∅0.064[1.63]
Top view pad 4.8: ∅0.094[2.38]
Top view pad of mounting:Groove R0.065[1.65]L0.157[4.00]
Bottom view pad 1.2.3.5.6.7: ∅0.102[2.60]
Bottom view pad 8: ∅0.150[3.80]
Bottom view pad 4: ∅0.130[3.30]
Bottom view pad of mounting:Groove R0.065[1.65]L0.252[6.40]

THERMAL CONSIDERATIONS

The power module operates in a variety of thermal environments.
However, sufficient cooling should be provided to help ensure reliable operation of the unit.
Heat is removed by conduction, convection, and radiation to the surrounding environment.
Proper cooling can be verified by measuring the point as the figure below.
The temperature at this location should not exceed “Maximum case temperature”.
When operating, adequate cooling must be provided to maintain the test point temperature at or below “Maximum case temperature”.
You can limit this temperature to a lower value for extremely high reliability.

- Thermal test condition with vertical direction by natural convection (20LFM).
- The iron base-plate dimension is 19” X 3.5” X 0.063” (The height is EIA standard 2U).
- The heat-sink is optional and P/N: 7G-0029B-F, 7G-0031B-F, 7GA0124P01-F, 7GA0125P01-F.

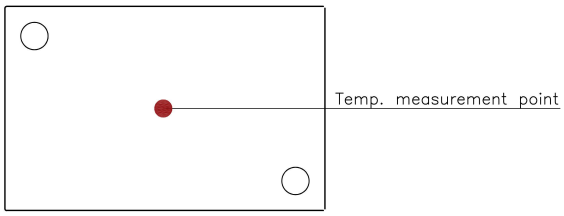

BASE PLATE

HEAT-SINK TYPE OPTIONS

QBE100-□□S□□W –**HS**
7G-0029B-F

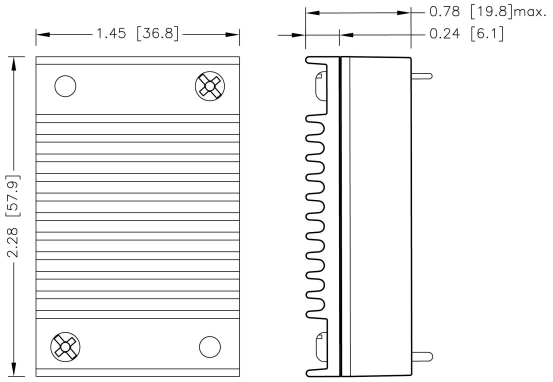

QBE100-□□S□□W –**HS2**
7G-0031B-F

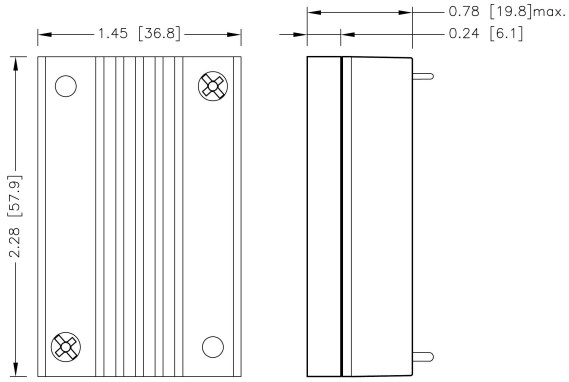

QBE100-□□S□□W –**HS4**
7GA0124P01-F

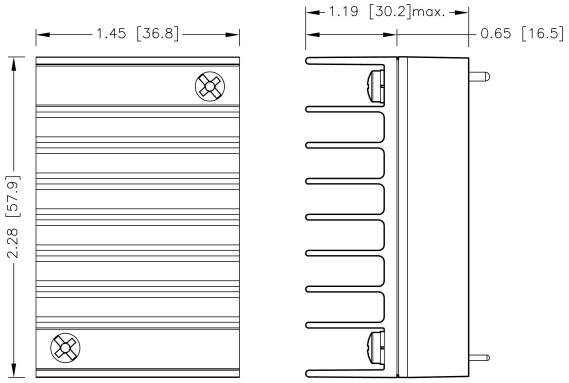

QBE100-□□S□□W –**HS5**
7GA0125P01-F

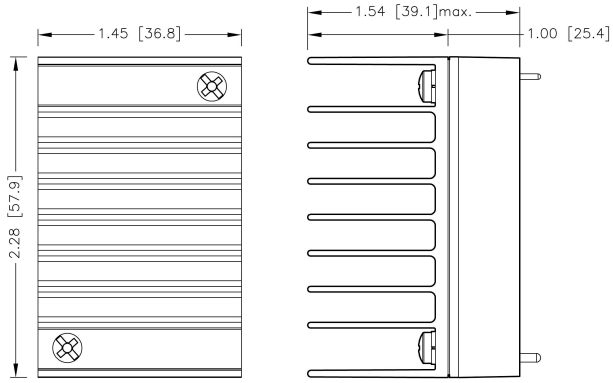

1. All dimensions in inch [mm]
2. Tolerance :x.xx±0.02 [x.x±0.5]

OUTPUT VOLTAGE ADJUSTMENT

Output voltage is adjustable for 10% trim up or -20% trim down of nominal output voltage by connecting an external resistor between the Trim pin and either the +Sense or -Sense pins.
With an external resistor between the Trim and -Sense pin, the output voltage set point increases.
With an external resistor between the Trim and +Sense pin, the output voltage set point decreases.
Maximum output deviation is +10% inclusive of remote sense.
The external Trim resistor needs to be at least 1/8W of rated power.

■ Trim Up Equation

$$R_U = \left[\frac{G \times 2.5}{(V_{o,up} - V_{o,nom})} - H \right] k\Omega$$

■ Trim Down Equation

$$R_D = \left[\frac{(V_{o,down} - 2.5) \times G}{(V_{o,nom} - V_{o,down})} - H \right] k\Omega$$

■ Trim Constants

Module	G	H
QBE100-□□S3P3W	5.1	1
QBE100-□□S05W	5.1	2
QBE100-□□S12W	10	5.1
QBE100-□□S15W	10	5.1
QBE100-□□S24W	56	13
QBE100-□□S28W	56	13
QBE100-□□S48W	66	27
QBE100-□□S54W	66	27

EXTERNAL OUTPUT TRIMMING

Output can be externally trimmed by using the method shown below.

Trim-up

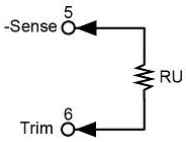

□□S3P3W

△V	(%)	1	2	3	4	5	6	7	8	9	10
Vout	(V)	3.333	3.366	3.399	3.432	3.465	3.498	3.531	3.564	3.597	3.630
RU	(kΩ)	385.36	192.18	127.79	95.59	76.27	63.39	54.19	47.30	41.93	37.64

□□S05W

△V	(%)	1	2	3	4	5	6	7	8	9	10
Vout	(V)	5.050	5.100	5.150	5.200	5.250	5.300	5.350	5.400	5.450	5.500
RU	(kΩ)	253.00	125.50	83.00	61.75	49.00	40.50	34.43	29.88	26.33	23.50

□□S12W

△V	(%)	1	2	3	4	5	6	7	8	9	10
Vout	(V)	12.120	12.240	12.360	12.480	12.600	12.720	12.840	12.960	13.080	13.200
RU	(kΩ)	203.23	99.07	64.34	46.98	36.57	29.62	24.66	20.94	18.05	15.73

□□S15W

△V	(%)	1	2	3	4	5	6	7	8	9	10
Vout	(V)	15.150	15.300	15.450	15.600	15.750	15.900	16.050	16.200	16.350	16.500
RU	(kΩ)	161.57	78.23	50.46	36.57	28.23	22.68	18.71	15.73	13.42	11.57

□□S24W

△V	(%)	1	2	3	4	5	6	7	8	9	10
Vout	(V)	24.240	24.480	24.720	24.960	25.200	25.440	25.680	25.920	26.160	26.400
RU	(kΩ)	570.33	278.67	181.44	132.83	103.67	84.22	70.33	59.92	51.81	45.33

□□S28W

△V	(%)	1	2	3	4	5	6	7	8	9	10
Vout	(V)	28.280	28.560	28.840	29.120	29.400	29.680	29.960	30.240	30.520	30.800
RU	(kΩ)	487.00	237.00	153.67	112.00	87.00	70.33	58.43	49.50	42.56	37.00

□□S48W

△V	(%)	1	2	3	4	5	6	7	8	9	10
Vout	(V)	48.480	48.960	49.440	49.920	50.400	50.880	51.360	51.840	52.320	52.800
RU	(kΩ)	316.75	144.88	87.58	58.94	41.75	30.29	22.11	15.97	11.19	7.38

□□S54W

△V	(%)	1	2	3	4	5	6	7	8	9	10
Vout	(V)	54.540	55.080	55.620	56.160	56.700	57.240	57.780	58.320	58.860	59.400
RU	(kΩ)	278.156	125.378	74.452	48.989	33.711	23.526	16.65	11.19	6.95	3.56

OUTPUT VOLTAGE ADJUSTMENT(CONTINUED)

Trim-down

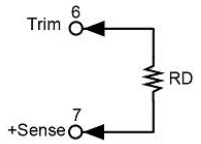

□□S3P3W

△V	(%)	1	2	3	4	5	6	7	8	9	10
Vout	(V)	3.267	3.234	3.201	3.168	3.135	3.102	3.069	3.036	3.003	2.970
RD	(kΩ)	117.54	55.72	35.11	24.81	18.63	14.51	11.56	9.35	7.64	6.26

△V	(%)	11	12	13	14	15	16	17	18	19	20
Vout	(V)	2.937	2.904	2.871	2.838	2.805	2.772	2.739	2.706	2.673	2.640
RD	(kΩ)	5.14	4.20	3.41	2.73	2.14	1.63	1.17	0.77	0.41	0.08

□□S05W

△V	(%)	1	2	3	4	5	6	7	8	9	10
Vout	(V)	4.950	4.900	4.850	4.800	4.750	4.700	4.650	4.600	4.550	4.500
RD	(kΩ)	247.90	120.40	77.90	56.65	43.90	35.40	29.33	24.78	21.23	18.40

△V	(%)	11	12	13	14	15	16	17	18	19	20
Vout	(V)	4.450	4.400	4.350	4.300	4.250	4.200	4.150	4.100	4.050	4.000
RD	(kΩ)	16.08	14.15	12.52	11.11	9.90	8.84	7.90	7.07	6.32	5.65

□□S12W

△V	(%)	1	2	3	4	5	6	7	8	9	10
Vout	(V)	11.880	11.760	11.640	11.520	11.400	11.280	11.160	11.040	10.920	10.800
RD	(kΩ)	776.57	380.73	248.79	182.82	143.23	116.84	98.00	83.86	72.86	64.07

△V	(%)	11	12	13	14	15	16	17	18	19	20
Vout	(V)	10.680	10.560	10.440	10.320	10.200	10.080	9.960	9.840	9.720	9.600
RD	(kΩ)	56.87	50.87	45.80	41.45	37.68	34.38	31.47	28.88	26.57	24.48

□□S15W

△V	(%)	1	2	3	4	5	6	7	8	9	10
Vout	(V)	14.850	14.700	14.550	14.400	14.250	14.100	13.950	13.800	13.650	13.500
RD	(kΩ)	818.23	401.57	262.68	193.23	151.57	123.79	103.95	89.07	77.47	68.23

△V	(%)	11	12	13	14	15	16	17	18	19	20
Vout	(V)	13.350	13.200	13.050	12.900	12.750	12.600	12.450	12.300	12.150	12.000
RD	(kΩ)	60.66	54.34	49.00	44.42	40.46	36.98	33.92	31.20	28.76	26.57

□□S24W

△V	(%)	1	2	3	4	5	6	7	8	9	10
Vout	(V)	23.760	23.520	23.280	23.040	22.800	22.560	22.320	22.080	21.840	21.600
RD	(kΩ)	4947.67	2439.33	1603.22	1185.17	934.33	767.11	647.67	558.08	488.41	432.67

△V	(%)	11	12	13	14	15	16	17	18	19	20
Vout	(V)	21.360	21.12	20.88	20.64	20.40	20.16	19.92	19.68	19.44	19.20
RD	(kΩ)	378.06	349.06	316.90	289.33	265.44	244.54	226.10	209.70	195.04	181.83

□□S28W

△V	(%)	1	2	3	4	5	6	7	8	9	10
Vout	(V)	27.720	27.440	27.160	26.880	26.600	26.320	26.040	25.760	25.480	25.200
RD	(kΩ)	5031.00	2481.00	1631.00	1206.00	951.00	781.00	659.57	568.50	497.67	441.00

△V	(%)	11	12	13	14	15	16	17	18	19	20
Vout	(V)	24.920	24.640	24.360	24.080	23.800	23.520	23.240	22.960	22.680	22.400
RD	(kΩ)	394.64	356.00	323.31	295.29	271.00	249.75	231.00	214.33	199.42	186.00

OUTPUT VOLTAGE ADJUSTMENT(CONTINUED)

Trim-down

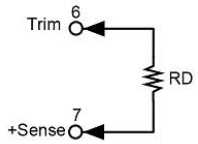

□□S48W

△V	(%)	1	2	3	4	5	6	7	8	9	10
Vout	(V)	47.520	47.04	46.56	46.08	45.60	45.12	44.64	44.16	43.68	43.20
RD	(kΩ)	6163.25	3035.13	1992.42	1471.06	1158.25	949.71	800.75	689.03	602.14	532.63

△V	(%)	11	12	13	14	15	16	17	18	19	20
Vout	(V)	42.720	42.240	41.760	41.280	40.800	40.320	39.840	39.360	38.880	38.400
RD	(kΩ)	475.75	428.35	388.25	353.88	324.08	298.2	275.01	254.54	236.28	219.81

□□S54W

△V	(%)	1	2	3	4	5	6	7	8	9	10
Vout	(V)	53.460	52.920	52.380	51.840	51.300	50.760	50.220	49.680	49.140	48.600
RD	(kΩ)	6201.44	3054.22	2005.15	1480.61	1165.89	956.07	806.21	693.81	606.38	536.44

△V	(%)	11	12	13	14	15	16	17	18	19	20
Vout	(V)	48.060	47.520	46.980	46.440	45.900	45.360	44.820	44.280	43.740	43.200
RD	(kΩ)	479.22	431.54	391.19	356.60	326.63	300.40	277.26	256.69	238.29	221.72

P-DUKE Technology Co., Ltd.

Tel +886-4-2359-0668
Fax +886-4-2359-1337
Email sales@pduke.com
Web www.pduke.com
Add No. 36, 22nd Rd., Taichung Industrial Park, Taichung, Taiwan, R.O.C.